| Product Code | Post Size (mm) | Height (mm) | Width (mm) | Frame (mm) | Notes: All size panels Available in Galvanised or Galv/PPC finish Infills - 12 16, 20Ø Round Bar 100 Gap between bars |
|---|---|---|---|---|---|
| G06-10 | 80 x 80 | 1000 | 1200 | 50 x 50mm SHS | |
| G06-12 | 80 x 80 | 1200 | 1200 | 50 x 50mm SHS | |

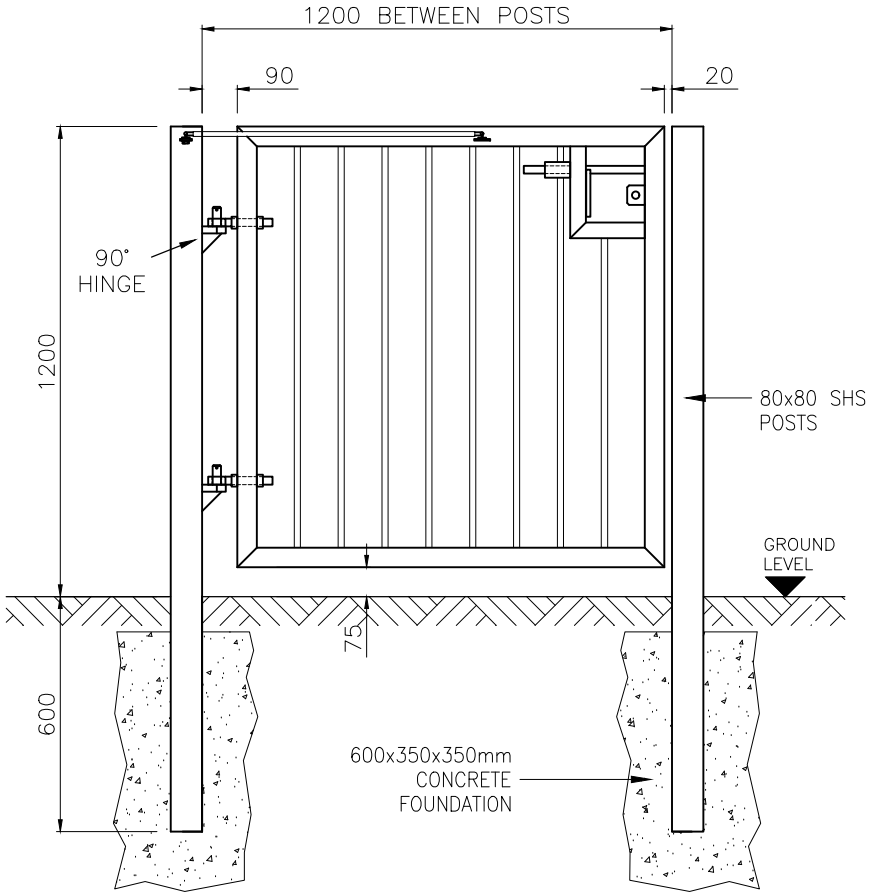


VIEW FROM INSIDE

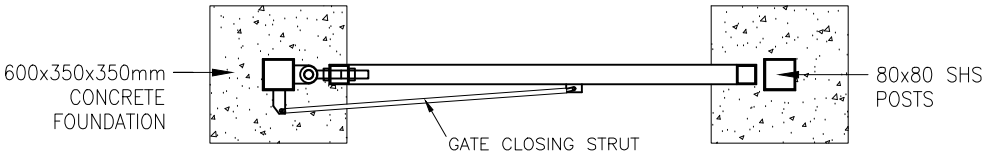


| REV: | DATE: | DESCRIPTION: |
|---|---|---|
| | | |
| | | |

PATH: Z:\INFO\SALES CAD 2016


Irish Fencing Services
SECURE • ENHANCE • PROTECT
Dublin - Cork - Newry
Irish Fencing & Services.
Unit 21, Jamestown Business Park,
Kylemore Way, Dublin 8
Tel: +353(0) 1 6268363 | Fax: +353(0) 1 6262309
www.irishfencing.com


STANDARD SALES DRAWING 2018

TITLE IRFEN®

SELF CLOSING GATE OPTION 2

| SCALE N.T.S | | DATE 19/09/18 |
|---|---|---|
| DRAWN PP | CHECKED | APPROVED |
| DRG No. G0601 | | REV. |