FINISH: HOT DIP GALVANISED
TO BS EN ISO 1461 OR
GALVANISED AND POWDER COATED

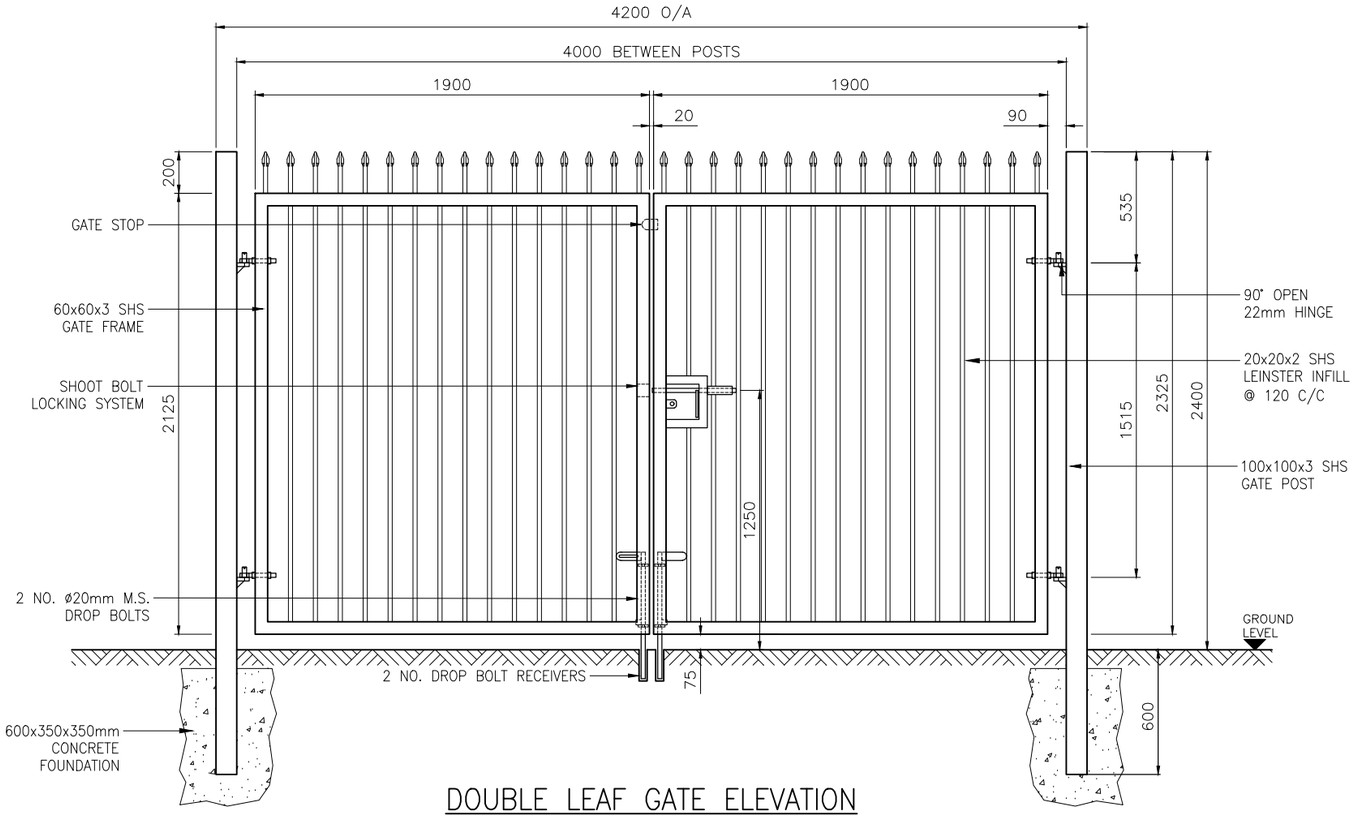

DOUBLE LEAF GATE ELEVATION

VIEWED FROM OUTSIDE

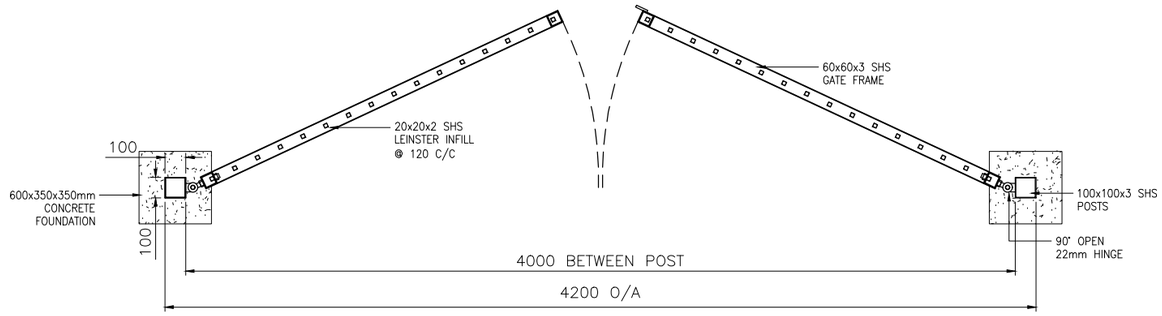

PLAN VIEW

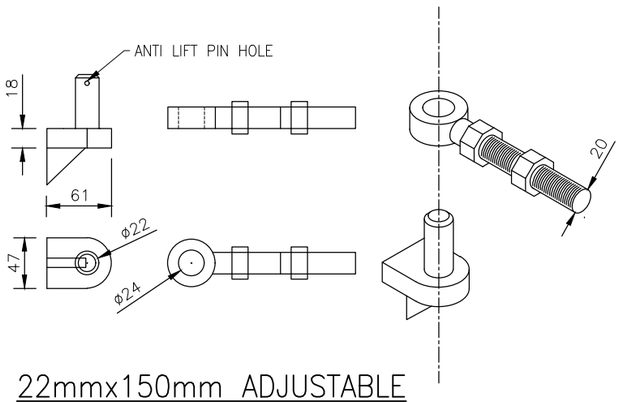

22mmx150mm ADJUSTABLE

HINGE ASSEMBLY

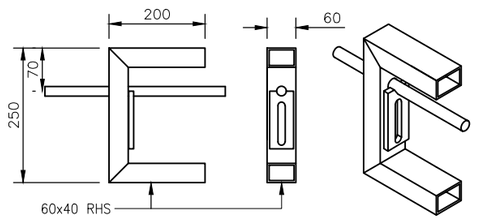

SHOOT BOLT ASSEMBLY

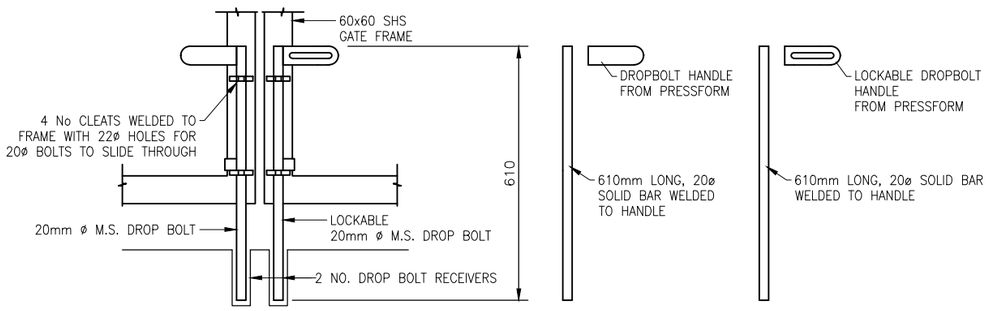

TYPICAL DROP BOLT DETAIL

VIEWED FROM INSIDE

REV:	DATE:	DESCRIPTION:

PATH:

Irish Fencing Services
SECURE • ENHANCE • PROTECT

Dublin - Cork - Newry
Irish Fencing & Services.
Unit 21, Jamestown Business Park,
Kylemore Way, Dublin 8
Tel: +353(0) 1 6268363 | Fax: +353(0) 1 6262309
www.irishfencing.com

STANDARD SALES DRAWING 2018

TITLE
IRFEN®
LEINSTER 4m DOUBLE LEAF GATE

SCALE N.T.S		DATE 18/09/18
DRAWN PP	CHECKED SW	APPROVED SW
DRG No. G-0208		REV.